University of Stuttgart
Germany

C. G. Morandi, S. Wasielewski, R. Minke, H. Steinmetz

Case study: integration of new sanitation technologies into current wastewater infrastructures exemplified by the *Treatment Plant for Education and Research at the University of Stuttgart*

13th IWA Specialized Conference on Small Water and Wastewater Systems

5th IWA Specialized Conference on Resources-Oriented Sanitation

Athens, Greece, 16.09.2016

Carlo G. Morandi

Outline

- Motivation
- Objectives
- Materials and Methods
- Results and Discussion
- Conclusion and Outlook

Motivation

Motivation

Splitting of wastewater streams on a household level

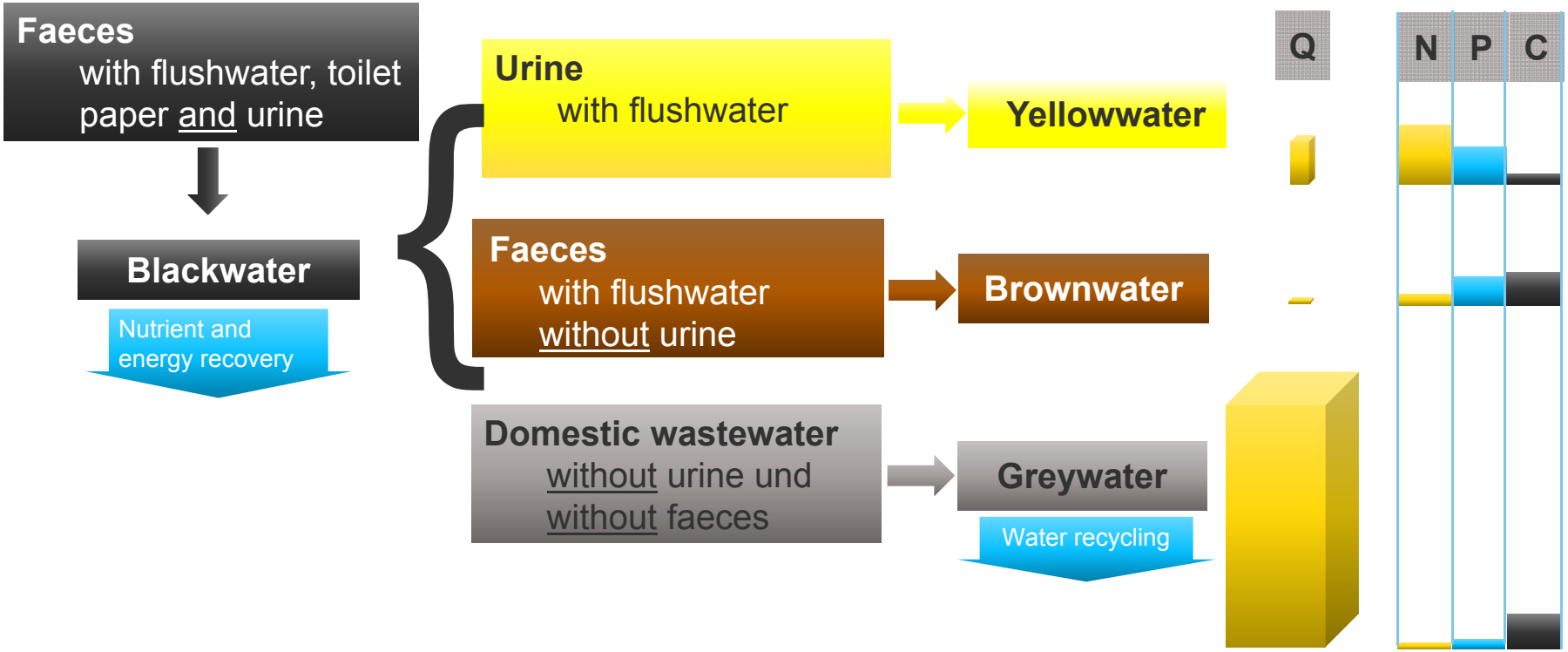

Motivation

How could the energy potential in blackwater be used, while best exploiting existing infrastructures?

HYDRAULIC RESERVE CAPACITIES IN MUNICIPAL DIGESTERS IN WWTPs EXIST

BUT: **BLACKWATER$_{raw}$**
1 % TSS
7 L/(PE·d)

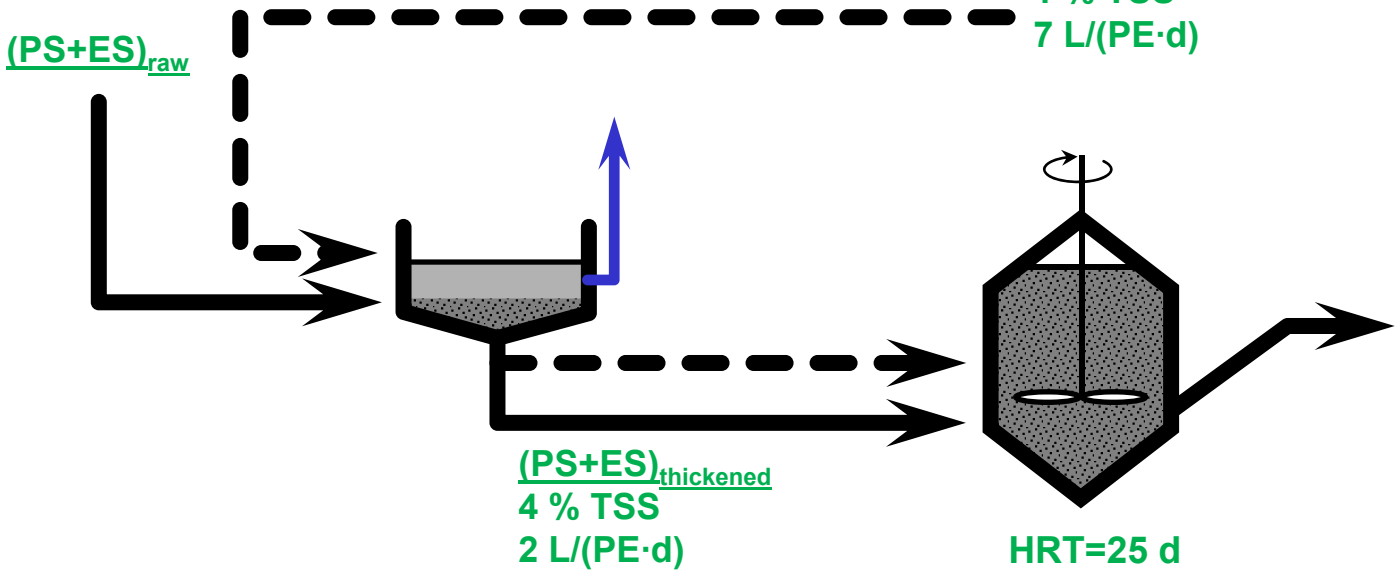

20 d ↔ 2.5 L/(PE·d)

Objectives

Objectives

OBJECTIVES

- Assessment of the feasibility of blackwater co-digestion in municipal digesters and impacts upon plant operation

HOW?

- Through inhabitant-specific mass and volume balances

WHY?

- Resource-oriented systems are a necessity for the longer-term wastewater treatment
- Technology and ideas for resource-oriented sanitation exist; however, the integration in wastewater infrastructures has usually been negleted.

Materials and Methods

Materials and Methods

Treatment Plant for Education and Research at the University of Stuttgart

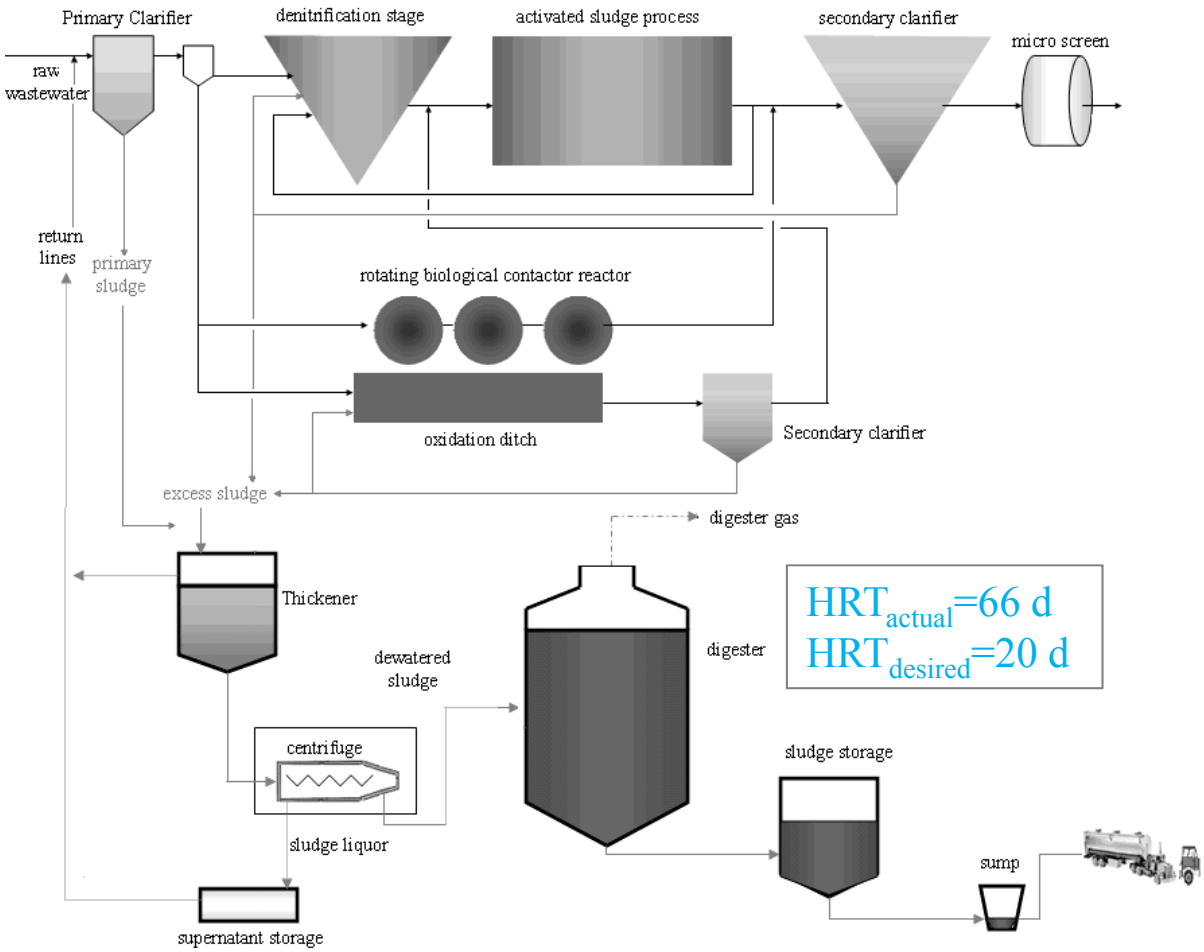

Mass and volume balances for the actual state

8,483 PE
1 PE=120 g COD/d

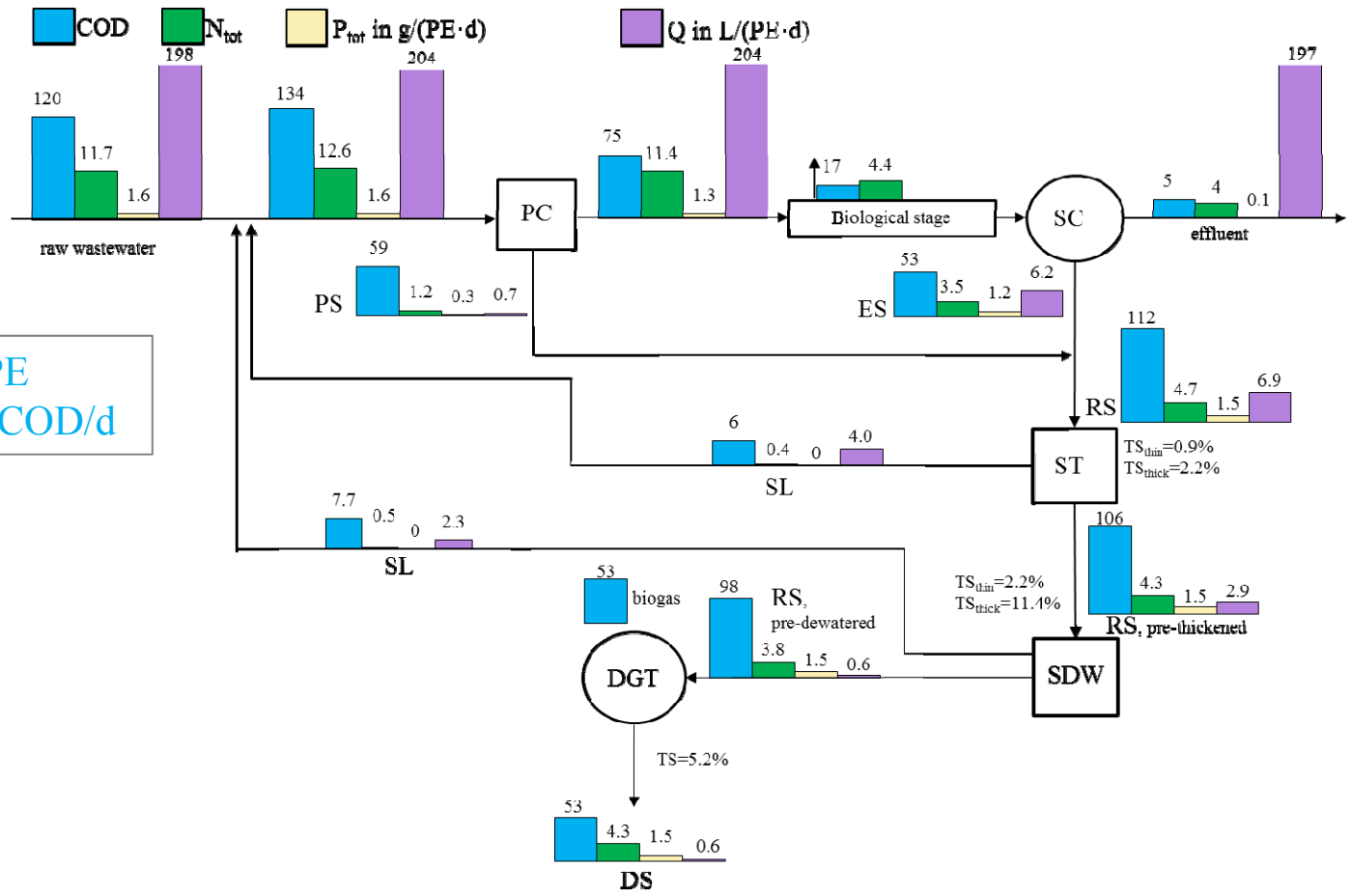

Results and Discussion

Results and Discussion

Mass and volume balances: 10 % transition

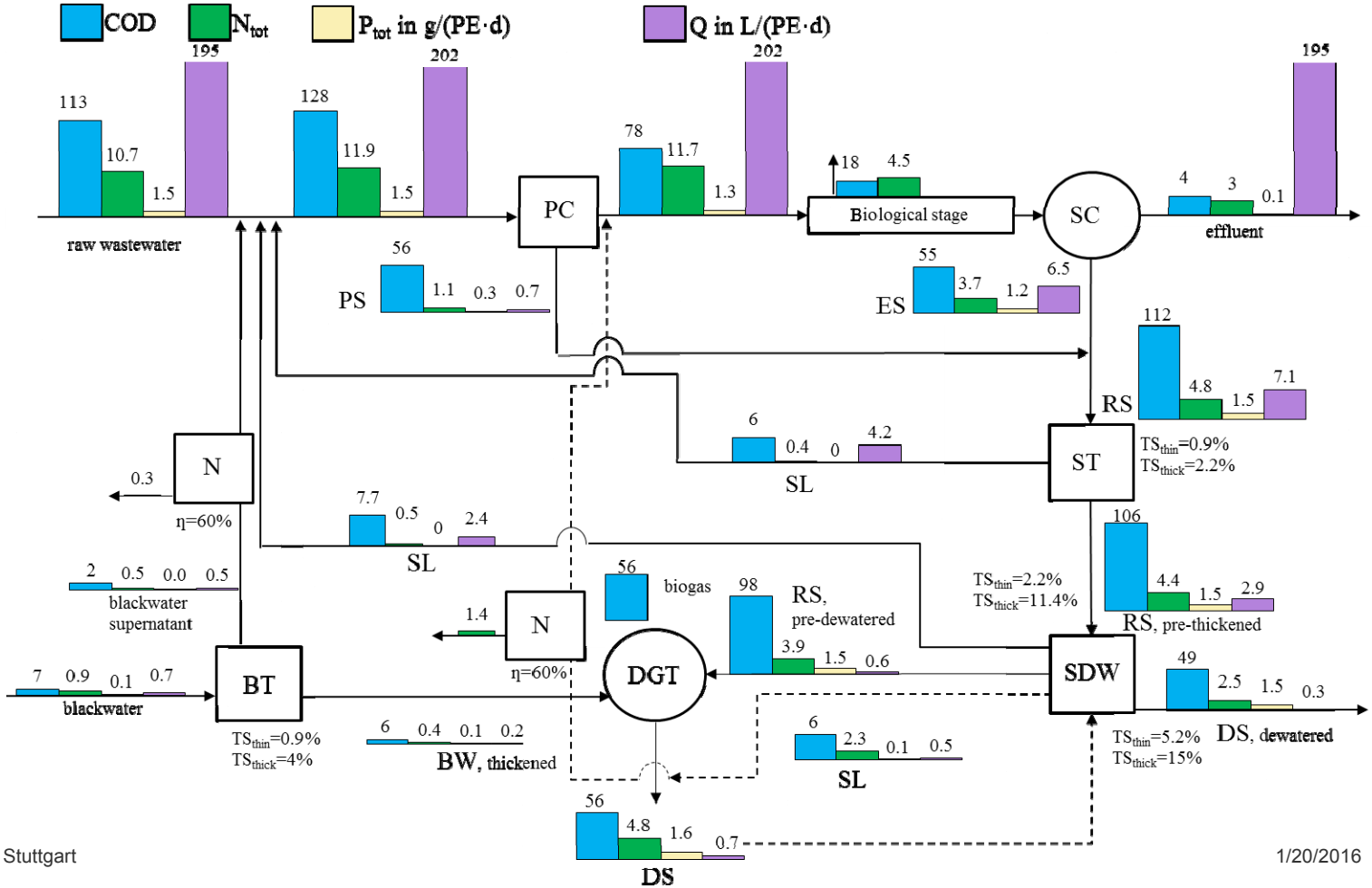

Results and Discussion

Mass and volume balances: 90 % transition

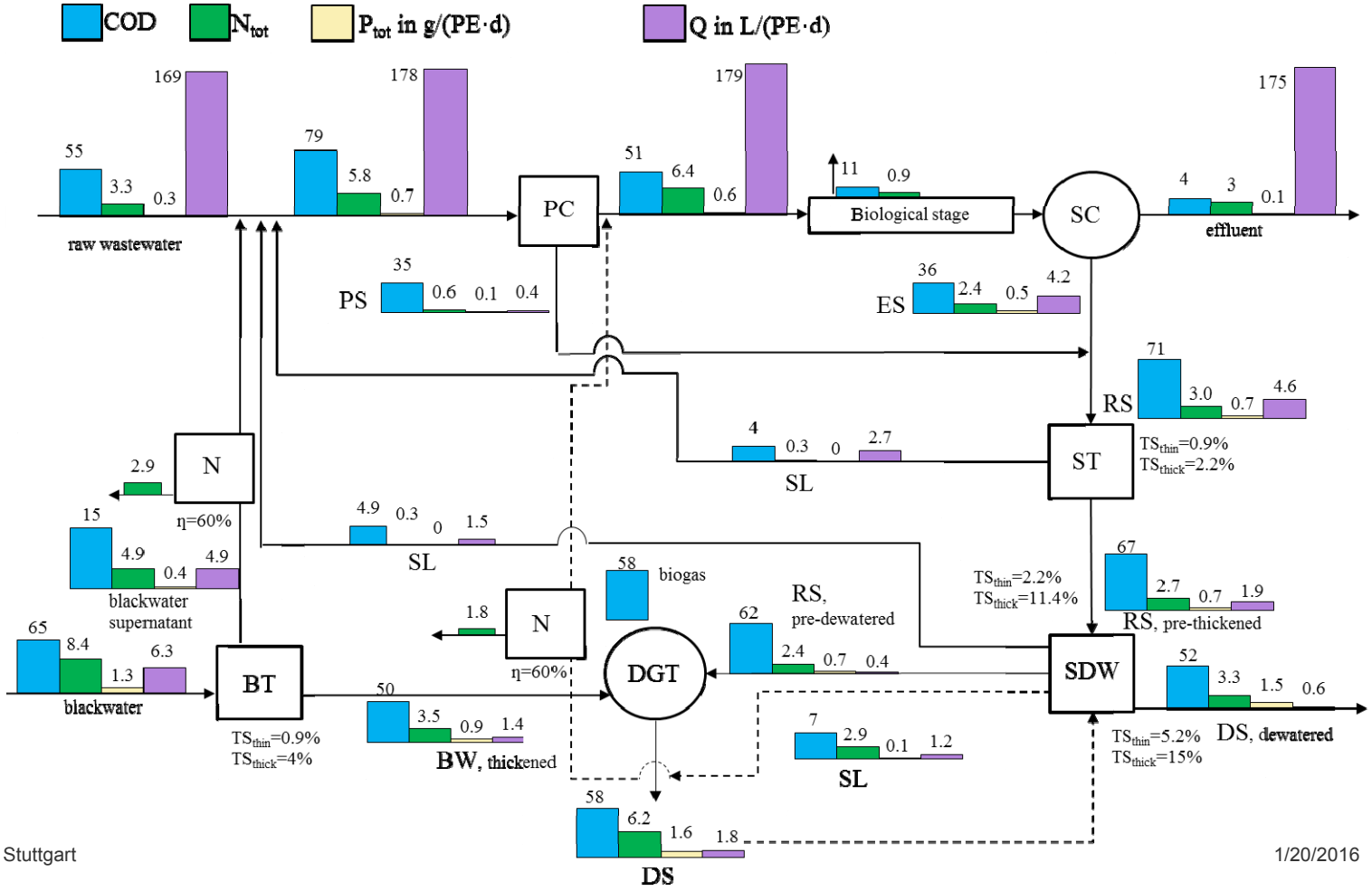

ults and Discussion

efits of the transition to resource-oriented sanitation systems

Measure	Benefits		
	N recovery potential	Biogas production	Power demand for aeration
Blackwater collection	0% N_{in}	15.9 kWh/(PE·a)	11.7 kWh/(PE·a)
Set-up dewatering digested sludge Set-up N recovery from sludge liquor, Ƞ=60%	20% N_{in} **1.4 g N/(PE·d)**		12.2 kWh/(PE·a) **+ 4 %**
Set-up blackwater thickening Set-up N recovery from sludge liquor and blackwater supernatant, Ƞ=60%	24% N_{in} **1.7 g N/(PE·d)**		12.0 kWh/(PE·a) **+ 2.5 %**
-	66% N_{in} **4.6 g N/(PE·d)**	17.5 kWh/(PE·a) **+ 10 %**	7.6 kWh/(PE·a) **- 35 %**

Conlusion and Outlook

clusions

CLUSIONS

- ter energy balance (35% reduction in ver for aeration and 10% improvement biogas generation)
- h nutrient recovery rates from sludge or and blackwater (up to 40% N_{in} and % P_{in})
- rient recovery offsets unfavorable l ratio
- ntralized greywater treatment proved ter in terms of process stability
- No major structural alterations in the plant are required
- The means used is appropriate
- Conventional WWTPs can be beneficially integrated into transition concepts
- Blackwater co-digestion improves energy balance and nutrient utilization within the plant

ook

OOK

e integration of new sanitation systems
romising, but must be carried out in
cordance with the capabilities of
sting infrastructures and precise
amination of the boundary conditions.

m

rlo G. Morandi

itute for Sanitary
gineering, Water
ality and Solid Waste
nagement

versity of Stuttgart

Stephan Wasielewski

Institute for Sanitary Engineering, Water Quality and Solid Waste Management

University of Stuttgart

Ralf Minke

Institute for Sanitary Engineering, Water Quality and Solid Waste Management

University of Stuttgart

Prof. Dr.-Ing. Heidrun Steinmetz

Department of Resource-Efficient Wastewater Technology

Technical University of Kaiserslautern

University of Stuttgart
Germany

Thank you!

Carlo G. Morandi

e-mail **carlo.morandi@iswa.uni-stuttgart.de**
phone +49 (0) 711 685-65414
fax +49 (0) 711 685-63729

University of Stuttgart
Institute for Sanitary Engineering, Water Quality
and Solid Waste Management
Bandtäle 2, 70569 Stuttgart, Germany