University of Stuttgart
Germany

C. G. Morandi, S. Wasielewski, R. Minke, H. Steinmetz

Case study: integration of new sanitation technologies into current wastewater infrastructures exemplified by the *Treatment Plant for Education and Research at the University of Stuttgart*

13th IWA Specialized Conference on Small Water and Wastewater Systems

5th IWA Specialized Conference on Resources-Oriented Sanitation

Athens, Greece, 16.09.2016

Carlo G. Morandi

Outline

- Motivation
- Objectives
- Materials and Methods
- Results and Discussion
- Conclusion and Outlook

Motivation

Motivation

Splitting of wastewater streams on a household level

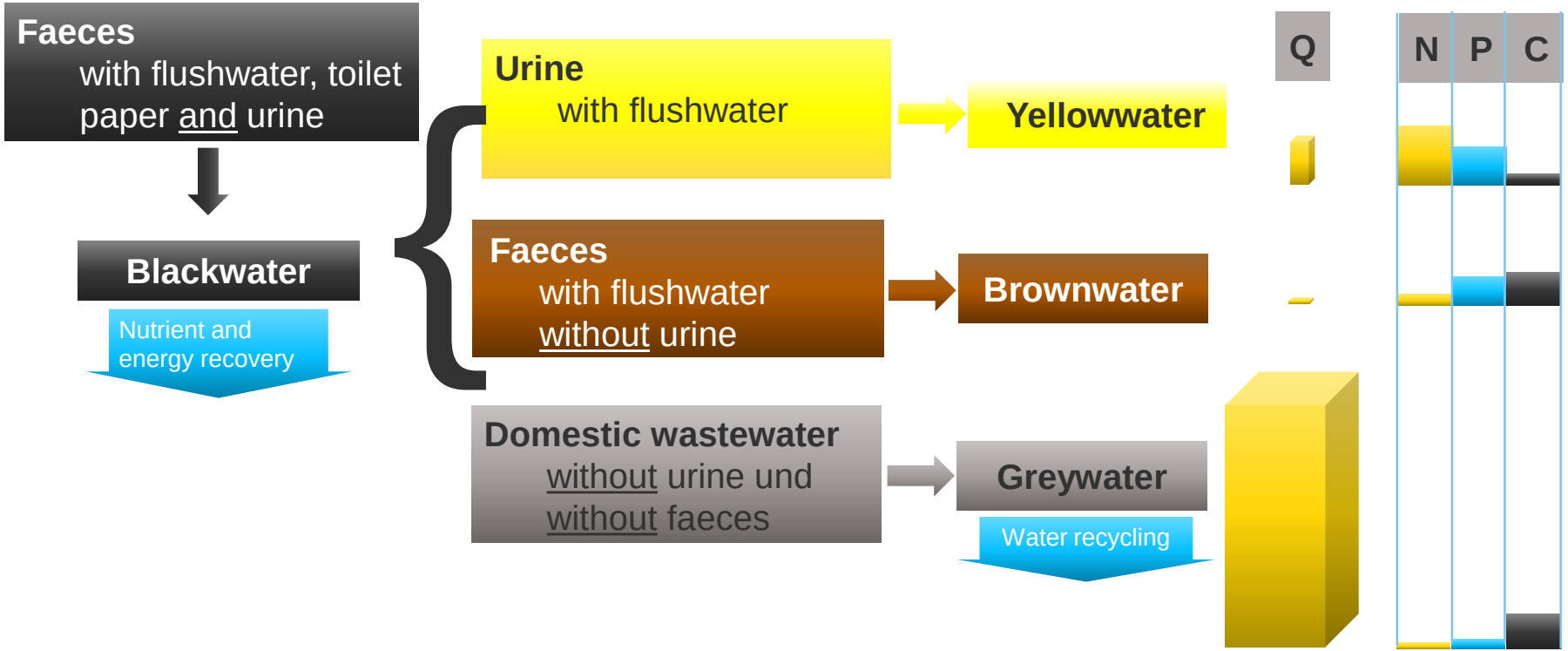

Motivation

How could the energy potential in blackwater be used, while best exploiting existing infrastructures?

HYDRAULIC RESERVE CAPACITIES IN MUNICIPAL DIGESTERS IN WWTPs EXIST

BUT: **BLACKWATER$_{raw}$**
1 % TSS
7 L/(PE·d)

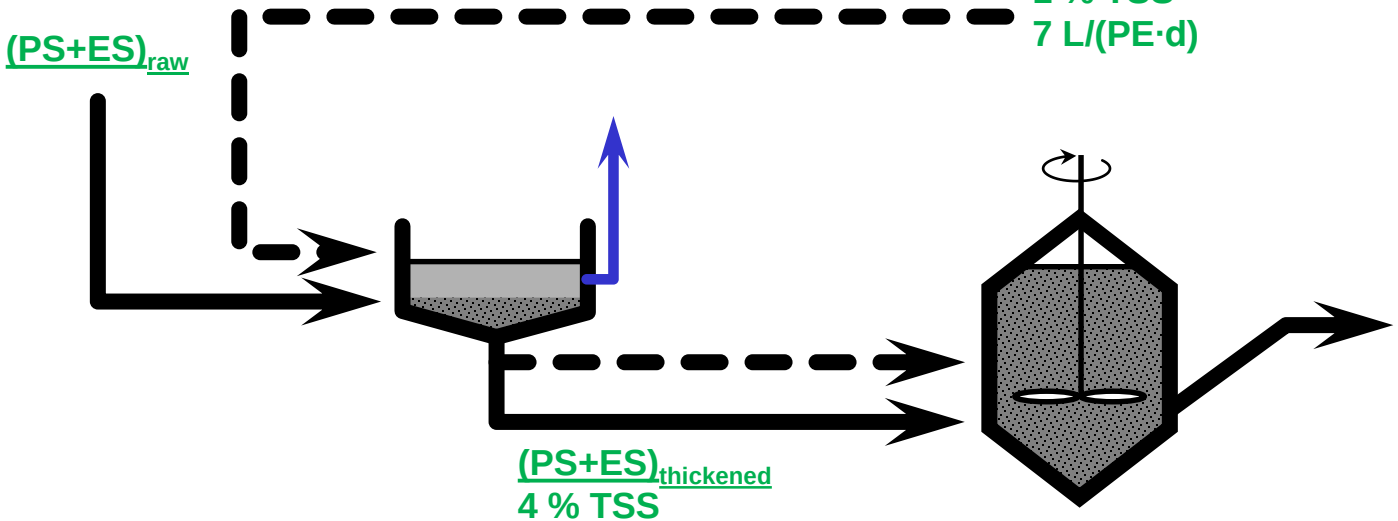

HRT=25 d

20 d ↔ 2.5 L/(PE·d)

Objectives

Objectives

OBJECTIVES

- Assessment of the feasibility of blackwater co-digestion in municipal digesters and impacts upon plant operation

HOW?

- Through inhabitant-specific mass and volume balances

WHY?

- Resource-oriented systems are a necessity for the longer-term wastewater treatment
- Technology and ideas for resource-oriented sanitation exist; however, the integration in wastewater infrastructures has usually been negleted.

Materials and Methods

Materials and Methods

Treatment Plant for Education and Research at the University of Stuttgart

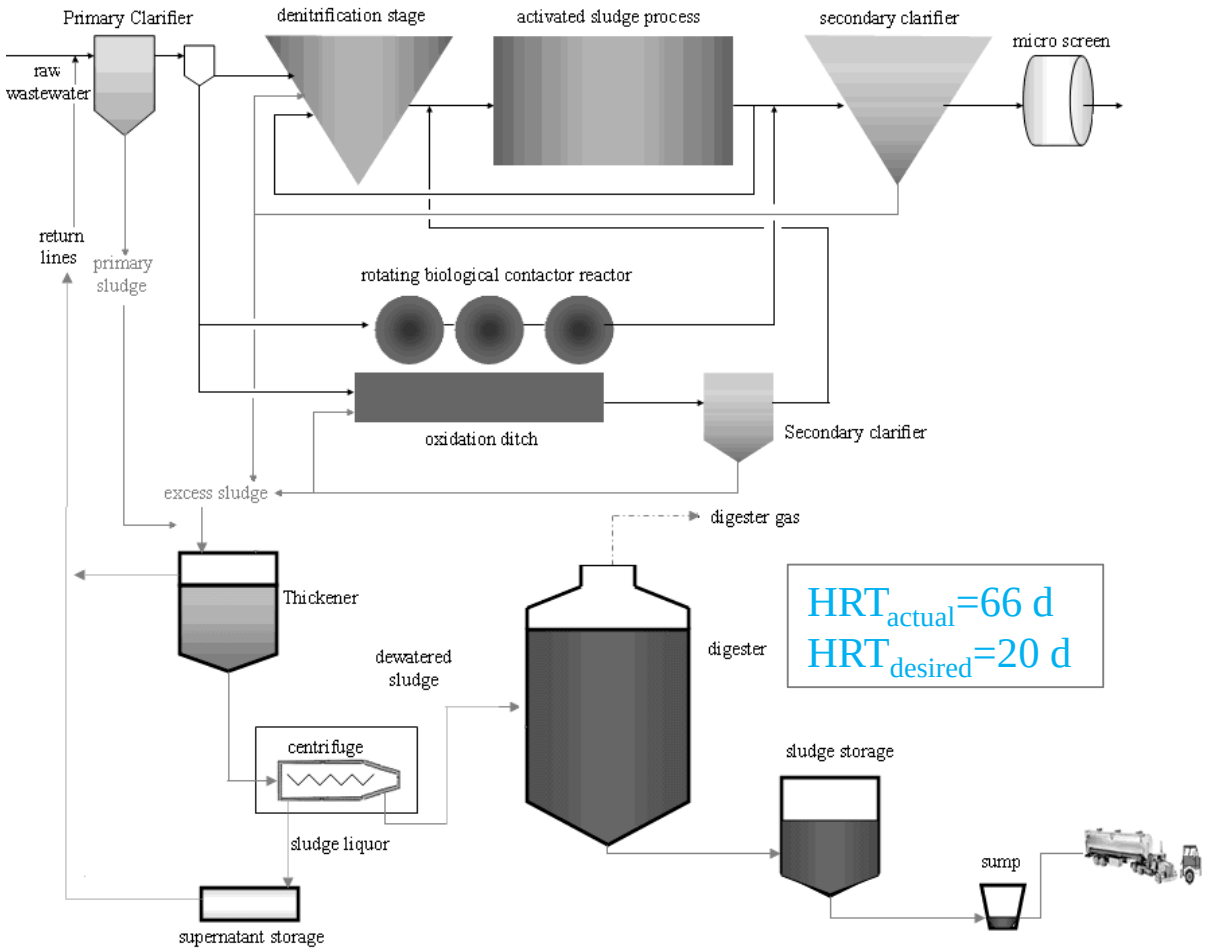

Mass and volume balances for the actual state

8,483 PE
1 PE=120 g COD/d

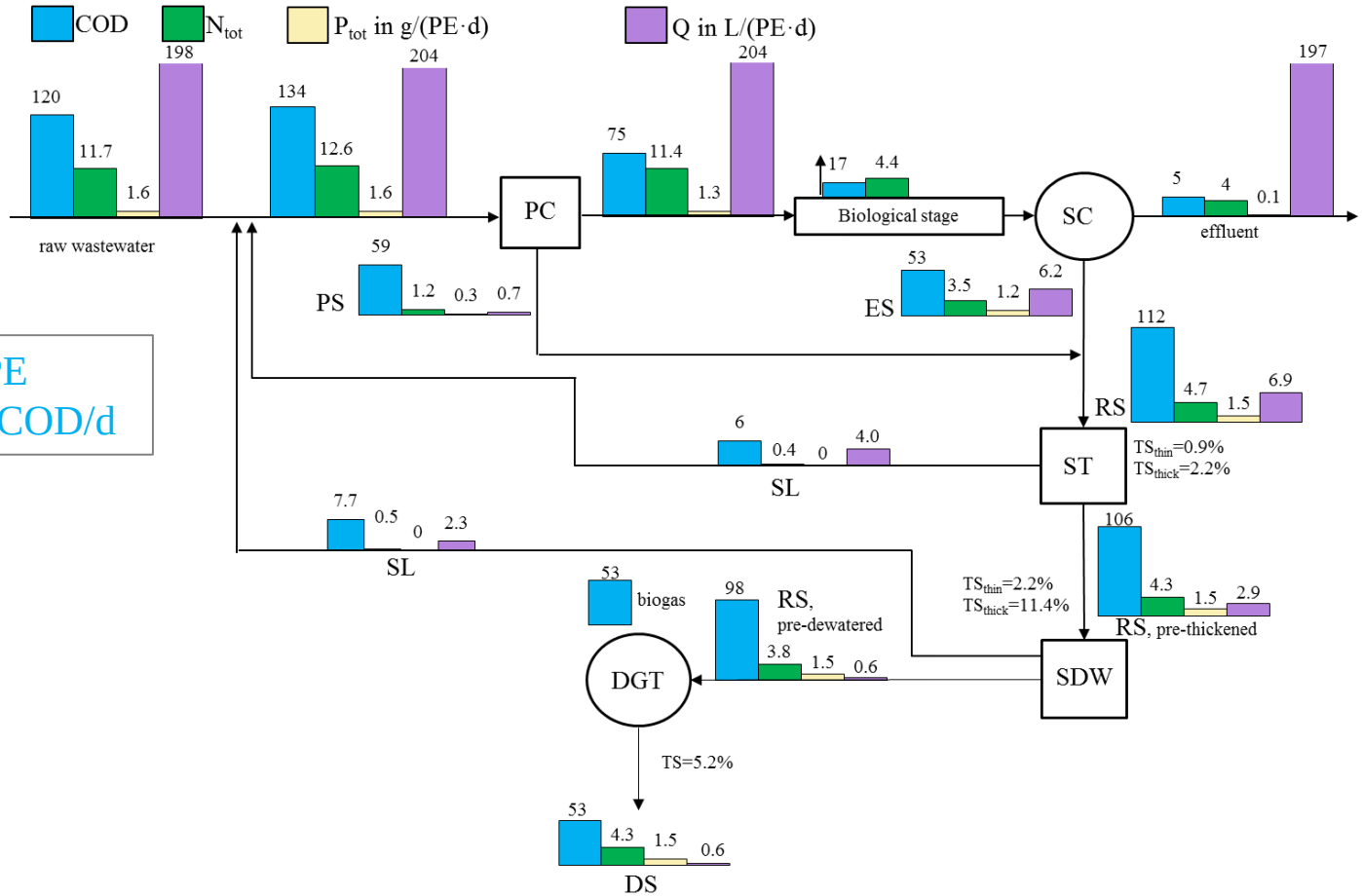

Results and Discussion

Results and Discussion

Mass and volume balances: 10 % transition

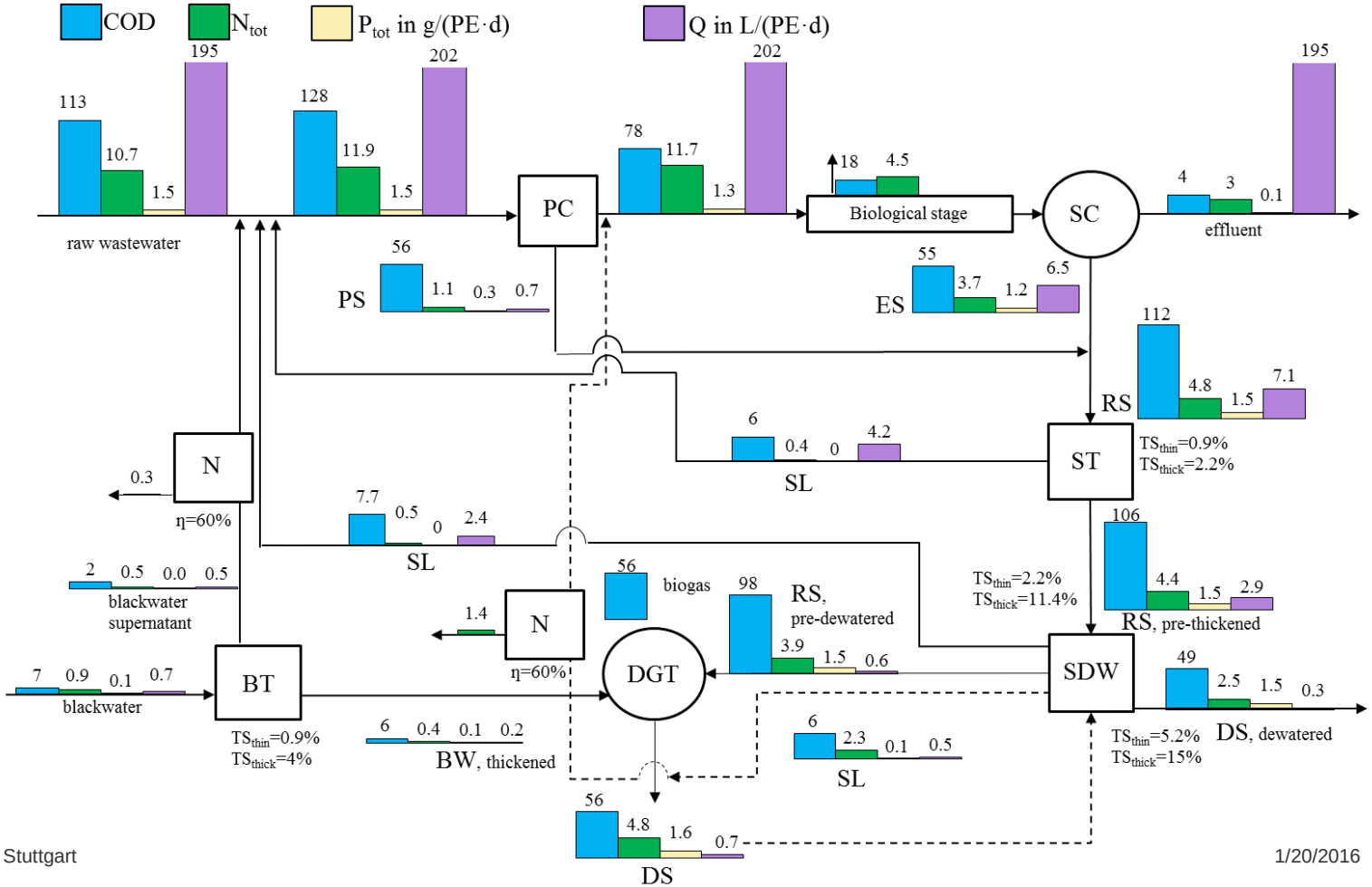

Results and Discussion

Mass and volume balances: 90 % transition

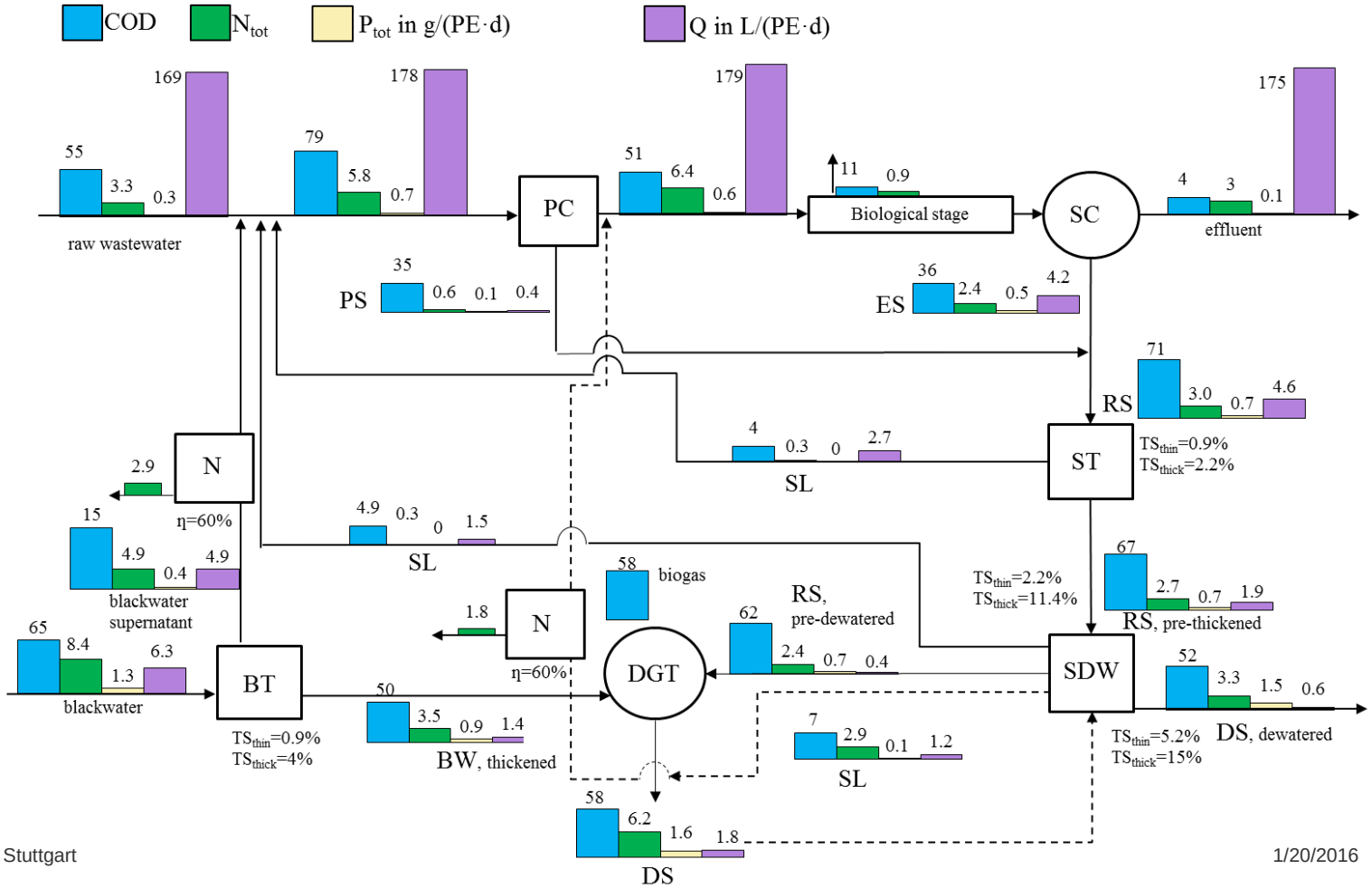

Results and Discussion

Benefits of the transition to resource-oriented sanitation systems

Transition state	Measure	Benefits		
		N recovery potential	Biogas production	Power demand for aeration
0%	Blackwater collection	0% N_{in}	15.9 kWh/(PE·a)	11.7 kWh/(PE·a)
5%	Set-up dewatering digested sludge Set-up N recovery from sludge liquor, Ƞ=60%	20% N_{in} **1.4 g N/(PE·d)**		12.2 kWh/(PE·a) **+ 4 %**
10%	Set-up blackwater thickening Set-up N recovery from sludge liquor and blackwater supernatant, Ƞ=60%	24% N_{in} **1.7 g N/(PE·d)**		12.0 kWh/(PE·a) **+ 2.5 %**
90%	-	66% N_{in} **4.6 g N/(PE·d)**	17.5 kWh/(PE·a) **+ 10 %**	7.6 kWh/(PE·a) **- 35 %**

Conlusion and Outlook

Conclusions

CONCLUSIONS

- Better energy balance (35% reduction in power for aeration and 10% improvement in biogas generation)
- High nutrient recovery rates from sludge liquor and blackwater (up to 40% N_{in} and 60% P_{in})
- Nutrient recovery offsets unfavorable C:N ratio
- Centralized greywater treatment proved better in terms of process stability
- No major structural alterations in the plant are required
- The means used is appropriate
- Conventional WWTPs can be beneficially integrated into transition concepts
- Blackwater co-digestion improves energy balance and nutrient utilization within the plant

Outlook

OUTLOOK

- The integration of new sanitation systems is promising, but must be carried out in accordance with the capabilities of existing infrastructures and precise examination of the boundary conditions.

Team

Carlo G. Morandi

Institute for Sanitary Engineering, Water Quality and Solid Waste Management

University of Stuttgart

Stephan Wasielewski

Institute for Sanitary Engineering, Water Quality and Solid Waste Management

University of Stuttgart

Ralf Minke

Institute for Sanitary Engineering, Water Quality and Solid Waste Management

University of Stuttgart

Prof. Dr.-Ing. Heidrun Steinmetz

Department of Resource-Efficient Wastewater Technology

Technical University of Kaiserslautern

University of Stuttgart
Germany

Thank you!

Carlo G. Morandi

e-mail **carlo.morandi@iswa.uni-stuttgart.de**
phone +49 (0) 711 685-65414
fax +49 (0) 711 685-63729

University of Stuttgart
Institute for Sanitary Engineering, Water Quality
and Solid Waste Management
Bandtäle 2, 70569 Stuttgart, Germany