unibz
Freie Universität Bozen
Libera Università di Bolzano
Università Liedia de Bulsan

Superstructure-based process synthesis and optimization of hydrogen production via biomass gasification

P. Postacchini*, F. Patuzzi, M. Baratieri

*corresponding/presenting author:
Pietro.postacchini@natec.unibz.it

Introduction

In the framework of decarbonization, the market-demand of hydrogen is expected to significantly increase [1]. Hydrogen production via biomass gasification is a potentially scalable and sustainable technology [2]. However, techno-economic-environmental assessments of biomass-to-hydrogen processes are yet deficient [3]. The **scope** of this research project is to cover this gap.

Methodology

1. Superstructure definition

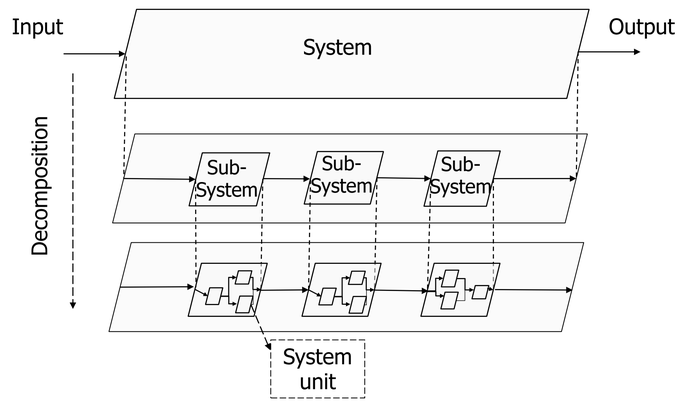

2. Superstructure optimization

Prosess design as a mathematical programming problem:
-Formulation of economic and environmental objective function
-The process configuration is the domain of the objective function

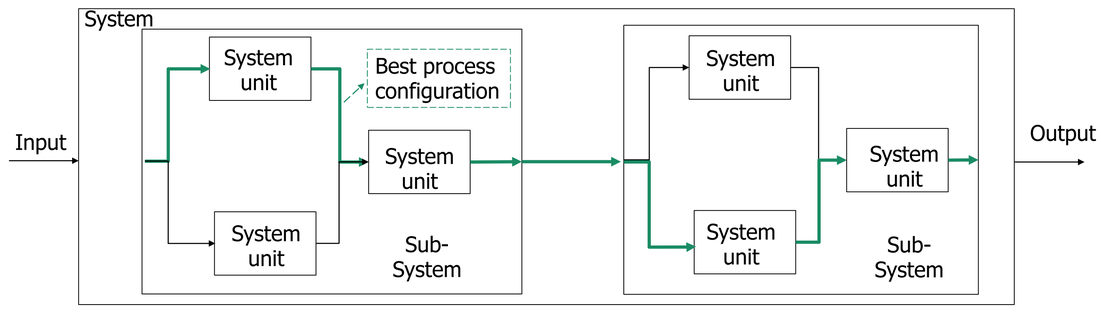

[4]

Results:
Identification of a superstructure

Pre-treatment

Woody biomass

Milling/ comminution * → Drying/ Torrefaction

Gasifier

Gasifier type ↓ / Gasifier spec. →	Gasifying agent	Thermal supply	Catalyst	Further specifications
Large scale (>80 MW_{input}): -Entrained flow *	-Steam * -Air -Oxygen * -CO2 -Mixtures	-Autothermal -Allothermal (e.g solar radiation)	-Alkali metals -Metals -Metallic oxides -Natural minerals -Hybrid	-Detailed reactor configuration -Temperature -Pressure -Equivalence ratio
Mid-large scale (1 -100 MW_{input}): -Fluidized bed: Bubbling Circulating: Externally * * Internally -Chemical looping				
Mid-small scale (1 -10 MW_{input}): -Updraft fixed bed				
Small scale (<1 MW_{input}): -Fluidized bed: Double stage fluidized/floating bed -Downdraft fixed bed				

Gas Cleaning (GC)

Fine particle removal	Tar removal	Coarse particle removal	
-Adsorption: physical chemical -Thermal catalytic decomposition	-Thermal cracking -Catalytic cracking -Non-/thermal plasmas -Physical separation *	-Cyclone * * -Filters: ceramic metallic -Electrostatic separator	**Hot GC (T>450 °C)**
	OLGA (oil scrubber)		**Warm GC (100-500 °C)**
-Water scrubber * -LOCAT process * -Chemobiological process	-Wet electrostatic separator -Venturi scrubber * -Water scrubber	-Wet scrubbing: Dynamic Spray Cyclonic spray Impactor scrubbier Venturi scrubber -Electrostatic scrubber	**Cold GC (T<100 °C)**

Gas Upgrading

Reforming → High temp. Water Gas Shift * * → Low temp. Water Gas Shift * *

Hydrogen separation

-Pressure swing adsorption (PSA) * *
-Temperature swing adsorption (TSA)
-Electric swing adsorption
-Amine based separation *
-Membrane separation:
Polymeric
Dense metal(e.g., nickel, Palladium, Platinum)

* Indicative process pathway of Salkuyeh et al. [8]

* Indicative process pathway of Menin et al. [9]

[5, 6, 7]

Conclusions

-Identification of a superstructure at a coarse detail level of biomass to-hydrogen.
-Future work:
Screening of the superstructure against feasibility constraints.
Identification of quantitative techno-economic-environmental parameters.
Superstructure optimization with support of OUTDOOR [10].

References

[1] Lepage et al. 2021 10.1016/j.biombioe.2020.105920
[2] Olateju & Kumar 2015 https://doi.org/10.1002/9781118991978.hces199.
[3] Cao et al. 2020 https://doi.org/10.1016/j.envres.2020.109547.
[4] Quaglia et al. https://doi.org/10.1016/j.compchemeng.2014.03.007
[5] Basu 2010 https://doi.org/10.1016/C2009-0-20099-7
[6] Prabhansu et al. 2015 https://doi.org/10.1016/j.jece.2015.02.011
[7] Shahbaz 2020 10.1016/j.ijhydene.2020.04.009
[8] Salkuyeh et al. 10.1016/j.ijhydene.2018.04.024
[9] Menin et al. https://doi.org/10.1007/s13399-020-00654-9
[10] Kenkel et al. 2021 10.1016/j.compchemeng.2021.107327